THE SHOWER LAB

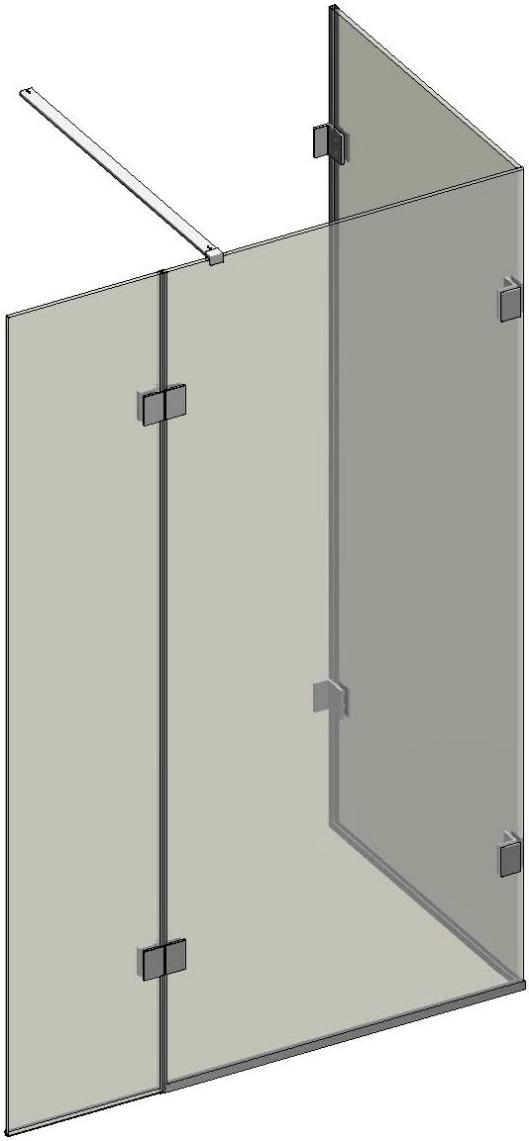

VIEW 19.3H

Illustration - View 19.3H
Right Hand
SB1 Stay Bar

IMPORTANT

- This shower screen / enclosure must be installed by suitably qualified individuals. We recommend a minimum of two people for safe assembly of certain sections of this screen.
- Ensure all appropriate safety equipment, especially protective footwear, safety glasses and gloves are used.
- When drilling holes in ceramic tiles, use masking tape to prevent the drill from slipping: **DO NOT** use hammer action as this will crack the tiles. Use a high quality drill bit to ensure a clean, precise hole.
- Please leave these instructions with the customer following installation.

PRIOR TO INSTALLATION

- Before disposing of the packaging and prior to commencing assembly, please check all the components to ensure that they have been supplied correctly and are undamaged. Subsequent claims for missing or damaged pieces will not be accepted once the packaging has been disposed of and installation commenced.
- In the event of any queries please contact your supplier quoting the relevant model information.
- The Tray / Tiled floor on which this screen is to be installed must be level on all sides.
- It may be necessary to use alternate fixings to those supplied, depending on the properties of the walls to be fixed to.
- Use the protective corners supplied at all times until the glass is moved to its final position.
- Ensure that the glass is installed correctly, taking care to avoid installing the glass upside down. On certain panels an easy clean coating is applied to one side only, this is clearly marked with a sticker on the non-coated side. The coated surface is to be fitted inwards towards the inside (wet side) of the screen.
- Ensure that all surfaces to be sealed are clean and dry prior to applying the silicone sealant. Use a high grade fungal resistant sealant.
- Allow a minimum of 48 hours after application of the silicone sealant prior to using the screen.

TOOLS & MATERIALS REQUIRED

Junior Hacksaw	Spirit Level	2 x Suction Glass Lifters
Straight Edge (Steel Rule)	Pencil	High Quality Silicone Sealant
Fine Tooth File	Silicone Gun	Tape Measure
Set or Roofing Square	Power Drill	Pozi-drive Screwdriver
Masking Tape	∅5.5mm Masonry Drill Bit	Safety Glasses & Gloves
Modelling Knife		

CARE AND MAINTENANCE (please ensure that these instructions are left with the installed unit)

- We recommend routine cleaning of your screen / enclosure with hot water using a soft cloth, then drying with a dry soft cloth or chamois leather.
- All glass has been treated with **EASY CLEAN** glass finish and care must be taken to avoid any abrasive cleaning products that may damage the special surface protection.
- **DO NOT** use acidic based de-scaler products or products containing bleaches or solvents.

Supplied Parts

Panel A x 1

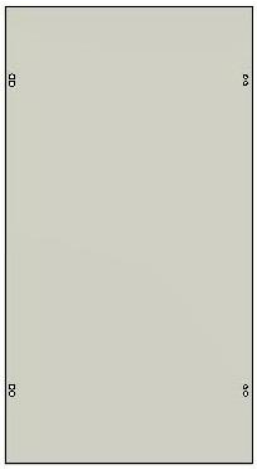

Panel B x 1

Panel C x 1

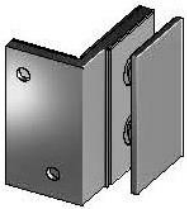

90° Glass to Wall Bracket x 2

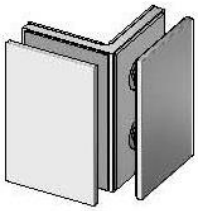

90° Glass to Glass Bracket x 2

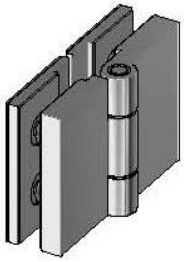

Glass to Glass Hinge x 2

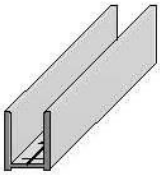

Wall / Base Channel x 3

Base Channel End Cap x 1

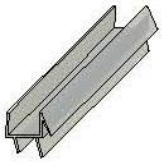

Bottom Panel Seal x 1

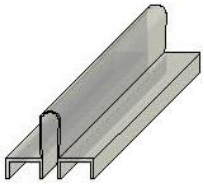

Curium Seal x 1

Rawl Plug & Screw x 3

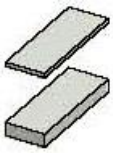

Spacers
3mm x 4
1mm x 4

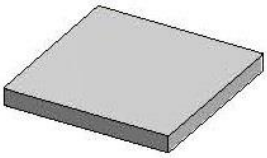

Square Alignment Jig x 1

Stay Bar Configuration Option

Configuration A – SB1

If no stay bar parts are included - No stay bar is required

Screen Configurations

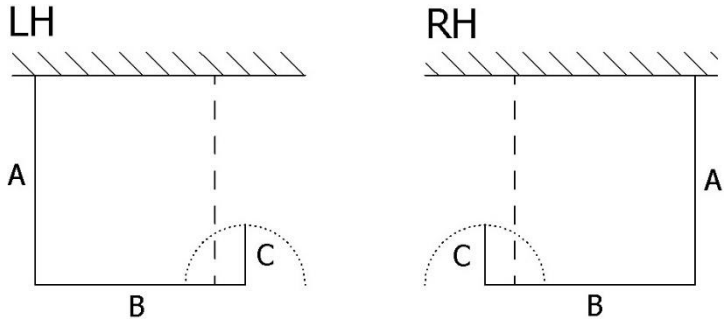

Exploded View

These instructions are for left and right handed options. The view below is for a **Right Hand** configuration with a SB1 “Configuration A” stay bar**.** On screens where panel A and B are less than 800mm nominal width, a stay bar is not required. You will need to determine which configuration you have and adapt the instructions as appropriate.

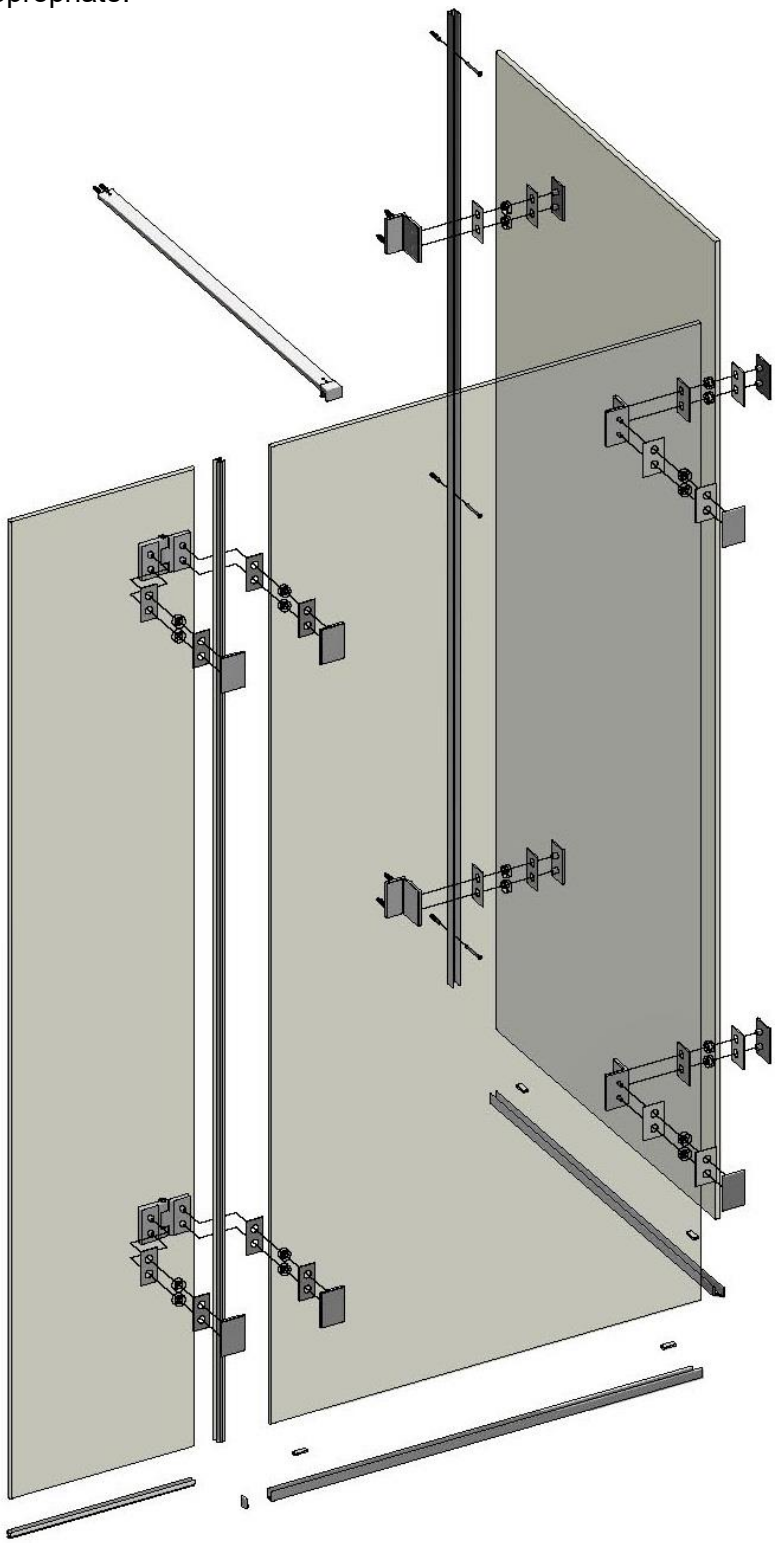

1 Position panel A base channel using a Set Square or Roofing Square. If using a raised shower tray, leave a recommended 3 – 8mm gap from the edge of the tray, (depending how far back you wish the base channel to sit).

IF NOT using a shower tray, position the base channel in the desired position.

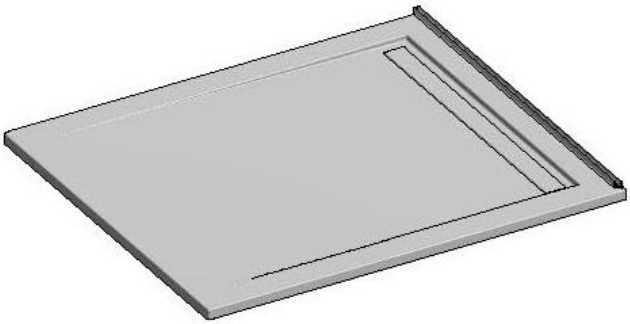

The end of the base channel should be firmly against the wall where the wall channel is to be fitted.

Temporarily fix the base channel by peeling the backing strip off two of the adhesive pads underneath and pressing in position.

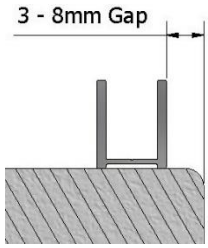

2 Insert the 10mm thick Square Alignment Jig to locate the wall channel. Using a Spirit Level ensure that the channel is vertical. Mark three holes through the pre-drilled channel as indicated to attach the channel to the wall.

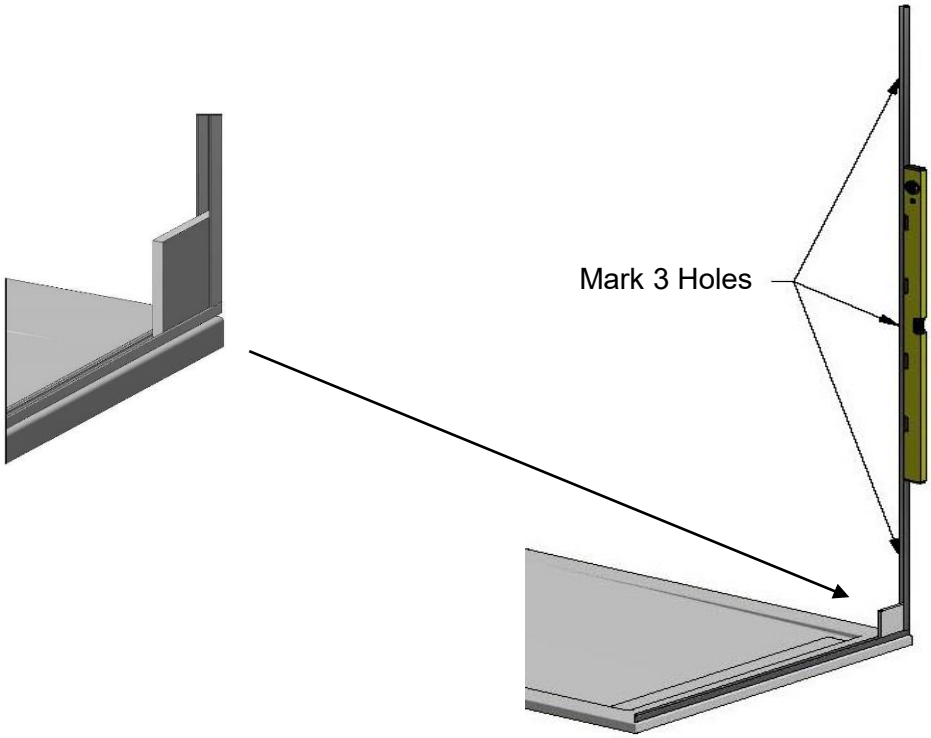

3 Using a ∅5.5mm high quality masonry drill bit for a clean and precise hole, drill the holes where marked and insert the wall plugs fully.

Professional Tip:

If drilling ceramic tiles, place masking tape on the tiles before marking and drill through the tape to prevent the drill bit from skidding around.

DO NOT use 'Hammer action' as this will crack the tiles.

4 Test fix the wall channel using the screws provided.
DO NOT use silicone at this point.

5 Trial fit panel A. Note the orientation and position of panel A, this can be determined by the number & size of holes and any attached labels.

Panel A is fitted onto 2 stacks of spacers, positioned as shown within the base channel: Start with the 3mm spacers. **NOTE,** there must be a minimum of one No. 1mm spacer under panel A.

Using purpose made 'Glass Lifters' to handle panel A, carefully insert into the wall channel and lower onto the spacers.

Panel A must be inserted squarely into the wall channel and lowered into the base channel. Take great care **NOT** to knock the corners as this can cause the panel to shatter.

To remove panel A, lift squarely from the base channel and slide out of the wall channel.

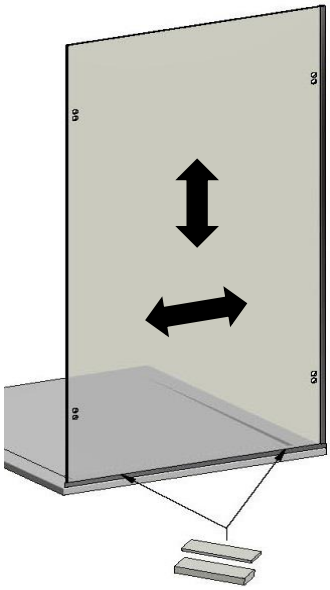

WARNING: The glass is heavy and may damage the floor and base channel if handled incorrectly. It is advisable to use a suitable non-slip protective mat to safeguard against damage to the floor (A strip of carpet is ideal). Never place glass across the base channel as this can damage it.

6 Remove and replace panel A adding or subtracting spacers as necessary to level the panel (to a maximum height of 5mm inside the base channel). Check panel A is level using a Spirit Level.

7 Loosely assemble the two 90° glass to wall brackets onto panel A. The face that attaches to the wall should normally be located within the shower screen.

DO NOT fit the cover plates yet.

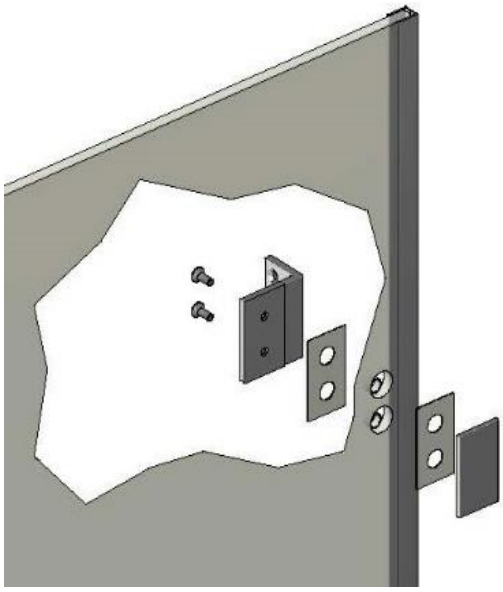

8 Using a Pencil, mark the holes for attaching the 90° glass to wall brackets to the wall.

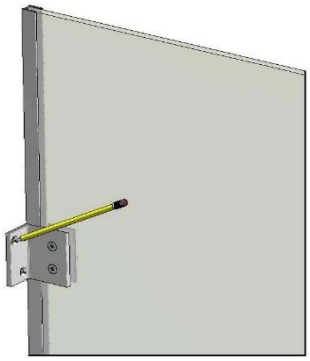

Use a piece of masking tape where the brackets touch the wall to mark onto.

9 Remove panel A and set aside safely to refit later.

Using a ∅5.5mm high quality masonry drill bit for a clean and precise hole, drill the holes where marked and insert the wall plugs fully.

Securely fix the 90° glass to wall brackets squarely to the wall.

10 Ensure the spacers are still in place in panel A base channel.

Carefully replace panel A ensuring it is level.

11 Reassemble the 90° glass to wall brackets. Evenly tighten the screws until the gaskets are just 'nipped'. **DO NOT** fit the cover plates yet.

12 Measure the distance from the wall to the outside edge of panel A. Add 12mm, this is your final dimension.

Distance Measured	mm
	+12mm
Final Dimension A =	mm

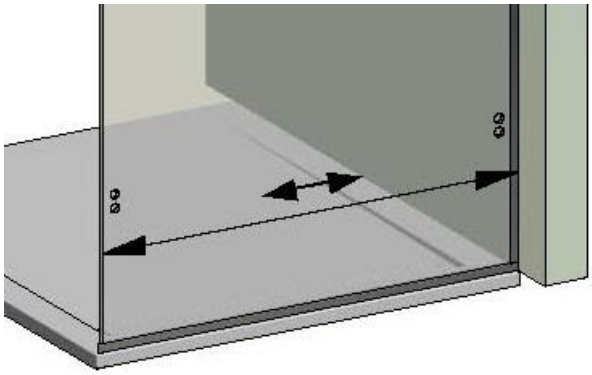

13 Remove the spacers from panel A base channel, note their position and keep together as separate stacks.

Mark the position of the inner edge (wet face) of panel A base channel onto the shower tray or floor.

Carefully remove panel A base channel from the shower tray / floor.

Measure the length of the final dimension [taken in instruction 12] back from the mitred end (45° end) of panel A base channel and mark, then carefully cut squarely with a fine toothed Junior Hacksaw.

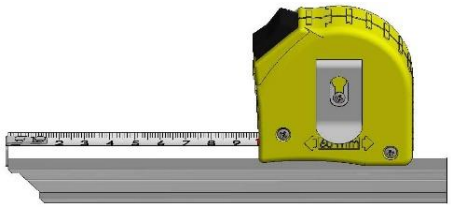

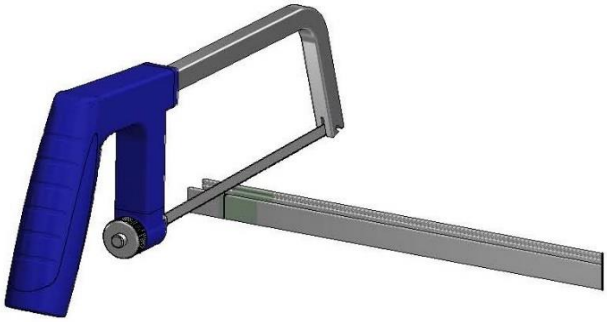

For best results we recommend wrapping some masking tape around the base channel in the area to be cut. Mark this with a Pencil to the correct length then cut, using a fine bladed Junior Hacksaw. Unwrap the tape, and remove any burrs with a fine toothed File, taking care not to scratch or damage the surface finish.

14 Reposition panel A base channel using a Set Square or Roofing Square to the mark made in instruction 13.

Peel the backing tape off the remaining adhesive pads and push firmly down.

Replace the spacers in panel A base channel in the position they were removed from in instruction 13.

15 Place panel B base channel on the shower tray / floor squarely up against panel B base channel as indicated.

Temporarily fix the base channel by peeling the backing strip off two of the adhesive pads underneath and pressing in position.

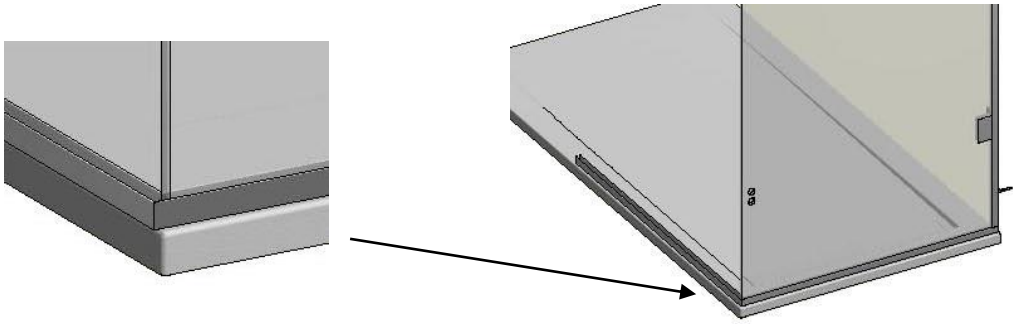

16 Fit panel B. Note the orientation and position of panel B, this can be determined by the number & size of holes and any attached labels.

Panel B is fitted onto 2 stacks of spacers, positioned as shown within the base channel: Start with the 3mm spacers. **NOTE,** there must be a minimum of one No. 1mm spacer under panel B.

Using purpose made 'Glass Lifters' to handle panel B, carefully lift onto the spacers and slide up to the inside face of panel A base channel so that the front edge of panel B is flush with the front of panel A.

Panel B must be inserted squarely into the base channel and slid towards panel A. Take great care **NOT** to knock the corners as this can cause the glass to shatter.

To remove panel B, slide away from panel A, then lift squarely from the base channel.

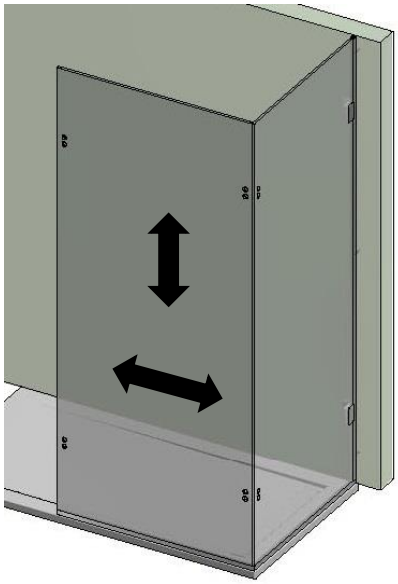

WARNING: The glass is heavy and may damage the floor and base channel if handled incorrectly. It is advisable to use a suitable non-slip protective mat to safeguard against damage to the floor (A strip of carpet is ideal). Never place glass across the base channel as this can damage it.

17 Remove and replace panel B adding or subtracting spacers as necessary to level the panel (to a maximum height of 5mm inside the base channel). Check panel B is level using a Spirit Level.

18 Check that the top of both panels are level. This can be done by raising or lowering one of the panels. Ensure that you add or remove spacers equally to raise or lower the panel.

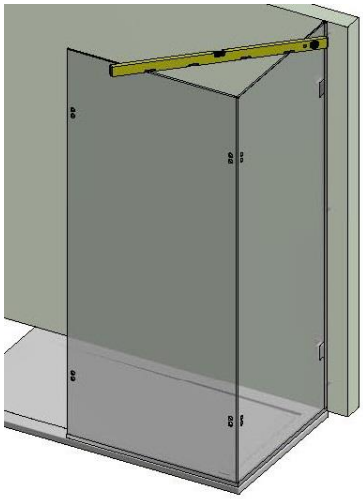

Remember not to stack the spacers higher than 5mm. If the difference in height between the panels is greater than 5mm, it may be necessary to lower the original panel before trying to raise the second.

19 Loosely assemble the 90° glass to glass brackets to panels A and B. Evenly tighten the screws until the gaskets are just 'nipped'.

DO NOT fit the cover plates yet.

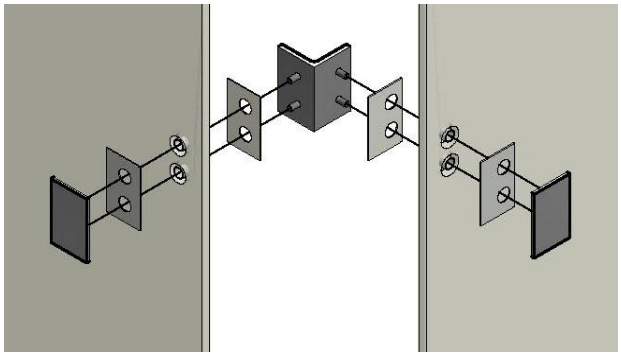

20 Measure the distance from the front of panel A base channel to the edge of panel B as shown. This is the final dimension.

Final Dimension B =	mm

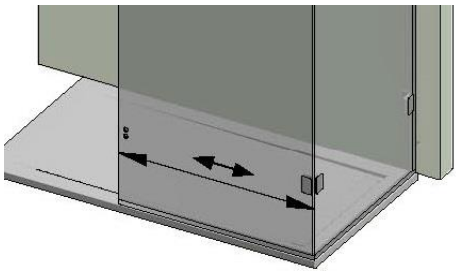

21 Using a straight edge mark the wall channel where it needs to be trimmed, in line with the top of panel A.

We recommend putting a piece of masking tape on the wall channel edge and marking onto this to prevent damage to the wall channel finish.

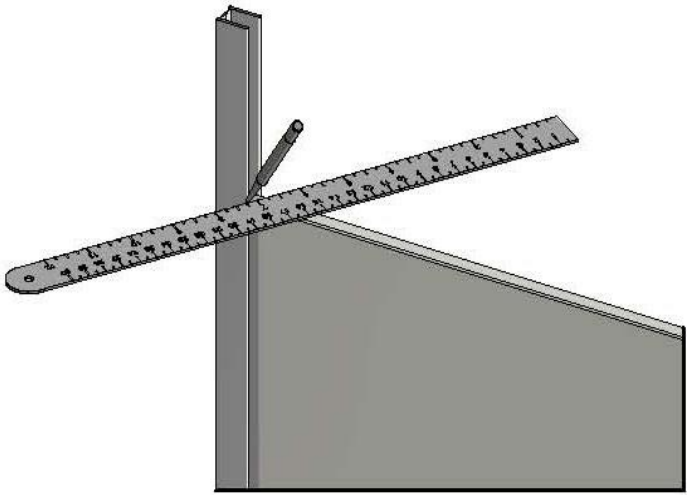

22 Remove all the panels and the wall channel and set the panels safely aside to refit later.

23 Remove the spacers from panel B base channel, note their position and keep together as separate stacks.

Mark the length of the final dimension taken in instruction 20 back from the mitred end (45° end) of the base channel.

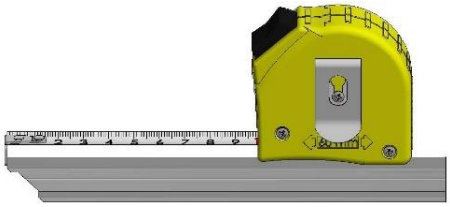

Using a fine toothed Junior Hacksaw, carefully cut panel C base channel. Ensure that the cut is square and along the mark made. Carefully use a fine toothed File to remove any burrs and sharp edges, taking care not to scratch or damage the surface finish.

24 Using a fine toothed Junior Hacksaw, carefully cut the wall channel to the correct length. Ensure that the cut is square and along the mark made. Carefully use a fine toothed File to remove any burrs and sharp edges, taking care not to scratch or damage the surface finish.

25 Refit panel C base channel squarely into position by peeling off the backing strips from the adhesive pads and pushing down firmly.

Replace the spacers in panel A base channel in the position they were removed from in instruction 23.

26 Re-attach the wall channel, this time using silicone sealant as indicated. Run a bead of silicone sealant along the back face of the wall channel to make a water tight seal to the wall. Again, place the Square Alignment Jig in and ensure the channel is vertical using a Spirit Level.

Wipe away any excess sealant that may have squeezed out the side of the channel, to leave a clean finish.

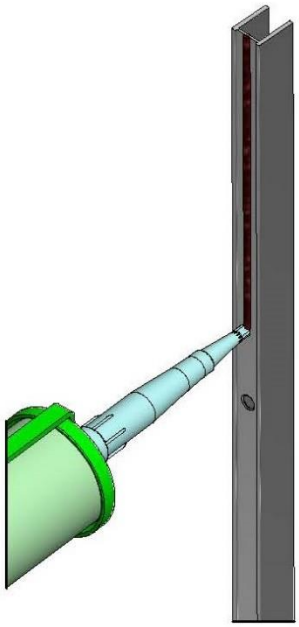

27 Run beads of silicone sealant down the wall channel, on the inside faces as shown.
DO NOT run too larger beads or fill the channel with silicone.

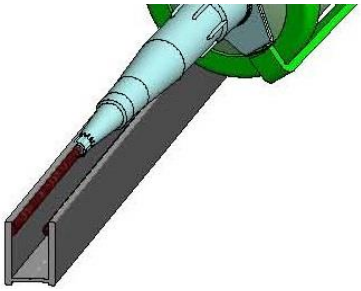

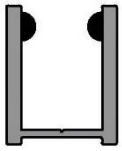

28 It is **VERY IMPORTANT** to put a good amount of silicone in the corner where the wall channel meets the base channel. This area needs to be properly sealed to prevent any water leakage

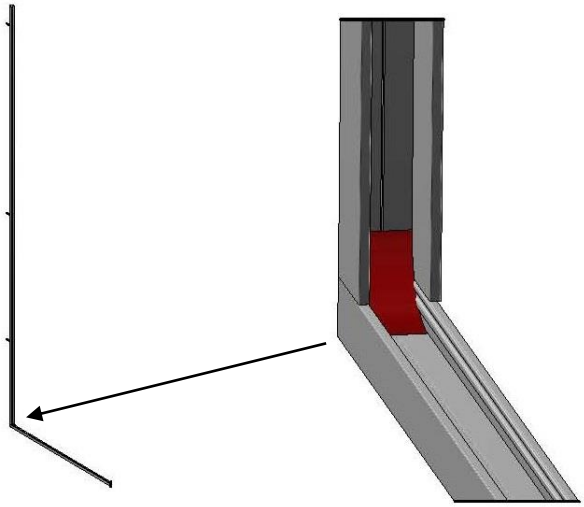

29 Ensure the spacers are still in place in panel A base channel.
Carefully replace panel A ensuring it is level.

30 Re-assemble the 90° glass to wall brackets to panel A. Evenly tighten the screws until the gaskets are just 'nipped', then turning each screw a quarter turn at a time, tighten the screws by one full turn. **DO NOT** fit the cover plates yet.

31 Ensure the spacers are still in place in panel B base channel.
Refit panel B ensuring it is level and flush to the front of panel A.

32 Reassemble the 90° glass to glass brackets. Evenly tighten the screws until the gaskets are just 'nipped', then turning each screw a quarter turn at a time, tighten the screws by one full turn. **DO NOT** fit the cover plates yet.

33 Loosely assemble the glass to glass hinges to panel A. Evenly tighten the screws until the gaskets are just 'nipped'.
Pack the underside of panel C until the top is level with panel B.

Attach panel C to the glass to glass hinges, evenly tighten the glass to glass hinge screws until the gaskets are just 'nipped', then turning each screw a quarter turn at a time, tighten all the hinge screws by one full turn

DO NOT fit the cover plates yet.

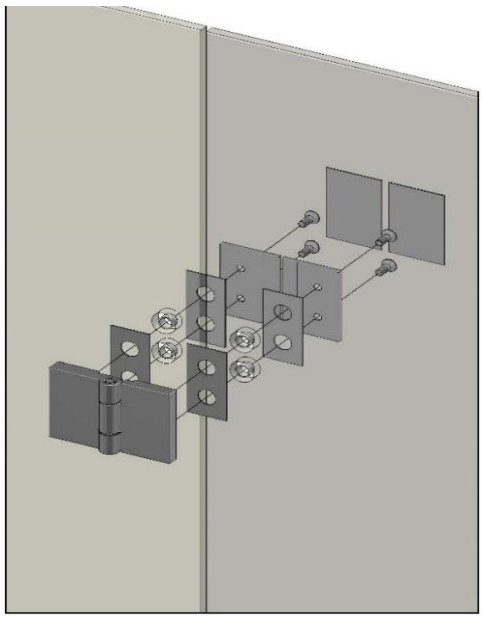

34 Attach the bottom panel seal to the bottom of panel B. Check the orientation is correct. Using a fine toothed Junior Hacksaw trim the bottom panel seal level with the edges of panel B.

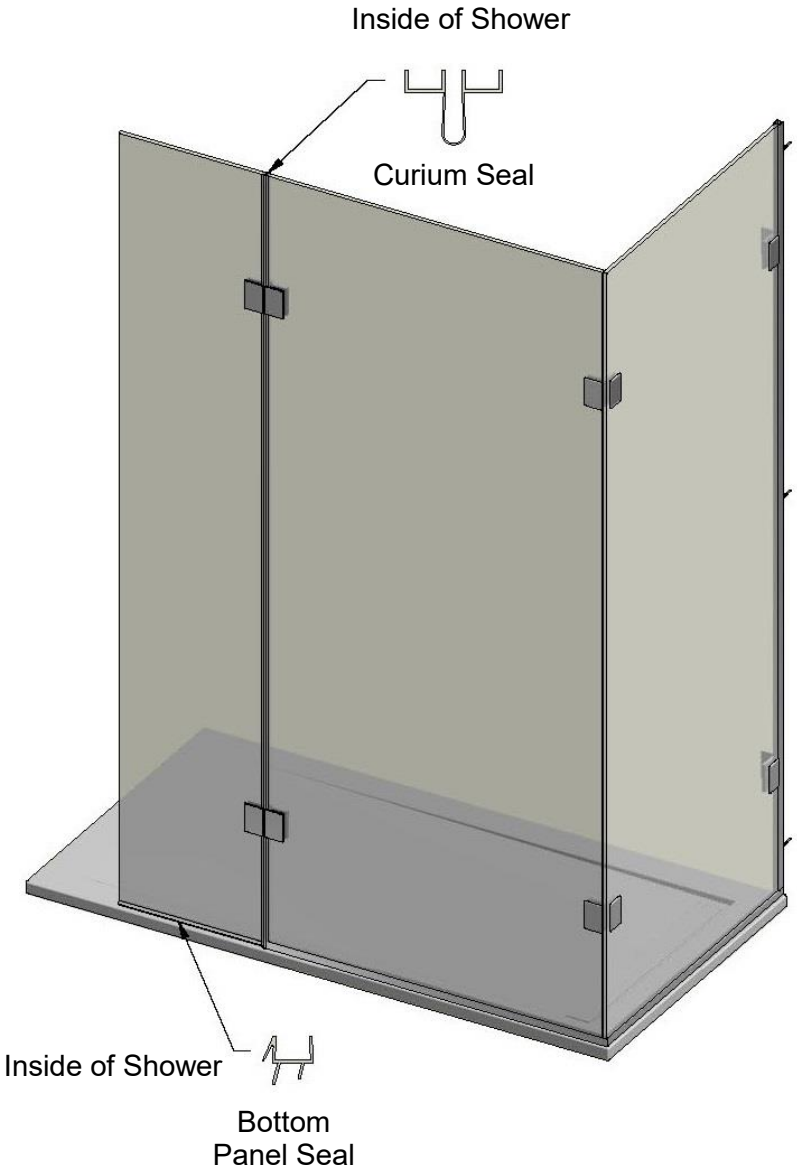

35 The bottom of the glass to glass seal needs to be trimmed using a fine toothed Junior Hacksaw as shown.

Ensure you have the correct orientation. Panel B's side needs to be notched by 19mm to fit around the base channel. **NOTE** that the whole of the 'U' section is trimmed on this side only.

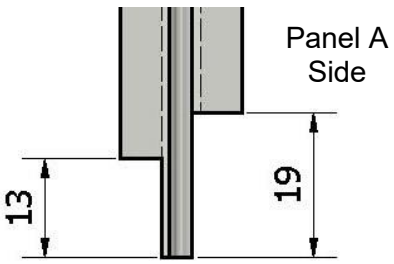

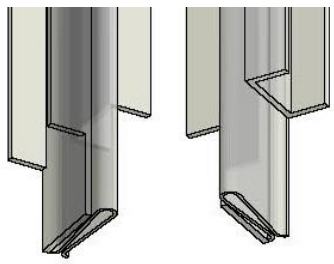

Notch panel C's side of the glass to glass seal removing the 'legs' of the 'U' section only.

36 Attach the glass to glass seal between the panels, the bottom of the seal should just touch the tray / shower floor to form a good seal.

Using a fine toothed Junior Hacksaw trim the top of the glass to glass seal level with the top of the panels.

We suggest using a sharp Modelling Knife to cut the softer central part of the seal.

37 Check if your screen configuration has been supplied a stay bar, if so proceed to fit following instructions 38 through 44. If no stay bar is included proceed to instruction 45.

38 Measure the distance from the inside face (wet side) of panel B to the wall opposite. Subtract 8mm, this is the final dimension. Ensure that this measurement is truly horizontal.

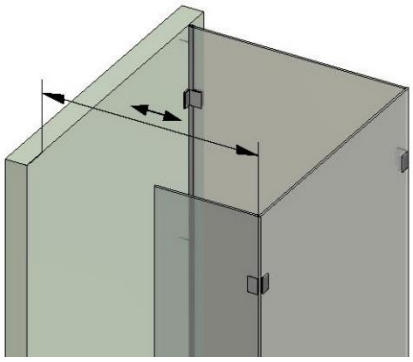

Distance Measured	mm
	-8mm
Final Dimension =	mm

39 Mark the length of the final dimension back from one end the stay bar. We suggest wrapping a piece of masking tape around the stay bar to make this easier.

Carefully cut the stay bar using a fine toothed Junior Hacksaw, taking care to make sure the cut is square.

Using a fine toothed File remove any burrs or sharp edges, taking care not to scratch or damage the surface finish.

DO NOT discard the off-cut yet.

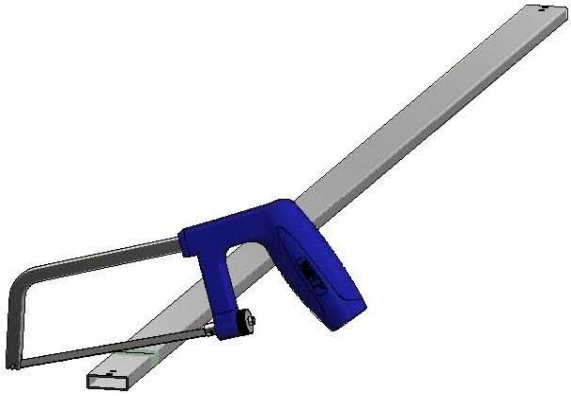

40 To prepare the cut end of the stay bar to take the glass clamp, attach the off-cut to the stay bar with masking tape as shown. Make sure the non-cut end of the off-cut is aligned with the end of the stay bar that you have just cut.

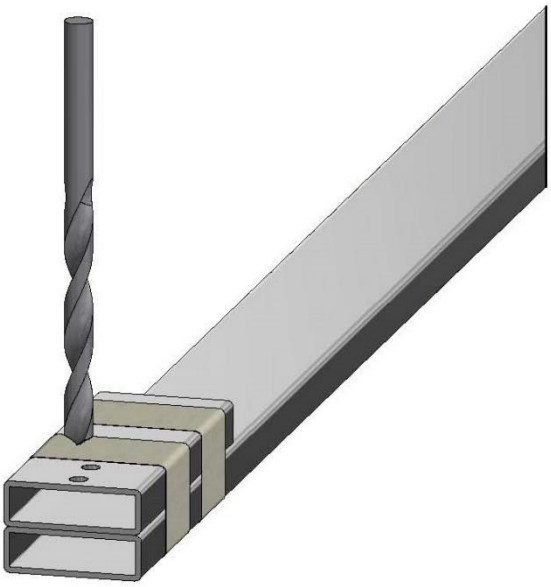

Use the Guide holes to drill two 5mm holes through one side of the stay bar only. Be careful **NOT** to drill through completely.

41 Assemble the stay bar to the glass clamp.

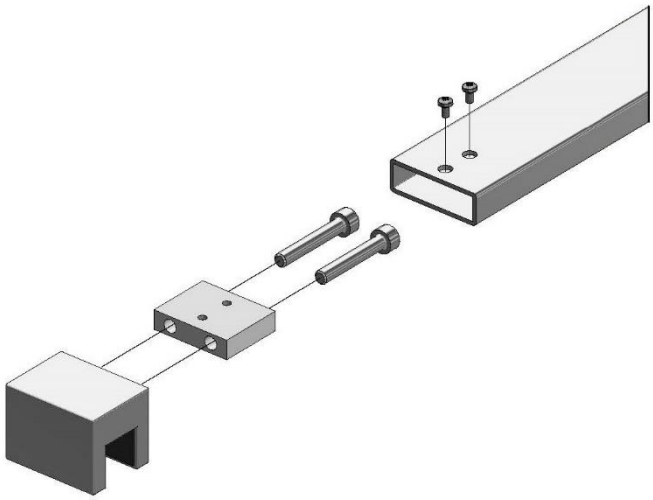

42 Secure the glass clamp over panel B. The stay bar should be approximately 25mm back from the inside of panel C as shown.

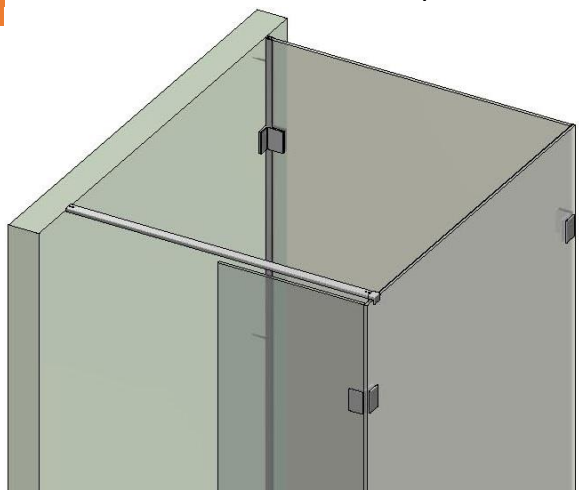

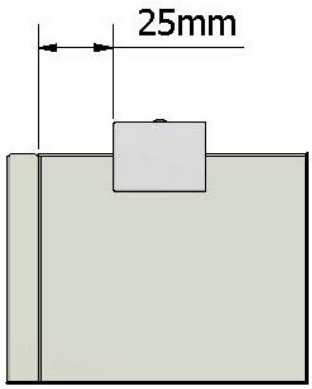

43 Ensuring that the stay bar is level and square, mark the location of the end of the bar onto the wall. Remove the stay bar and position the stay bar connector central to the line and with a small drill, mark the holes for drilling.

Use a piece of masking tape where the stay bar touches the wall to mark onto.

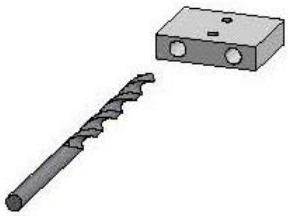

44 Using a ∅5.5mm high quality masonry drill bit for a clean and precise hole, drill the holes where marked and insert the wall plugs fully.

Screw the stay bar connector to the wall, reassemble the stay bar to panel B and securely tighten all fasteners.

45 Using a sharp Modelling Knife, trim any excess gasket material from the 90° glass to wall brackets and 90° glass to glass brackets that may have squeezed out when tightening. Take care not to scratch the glass surface. Fit the cover plates to all the brackets.

46 Apply a small amount of silicone to the base channel end cap and insert into the end of panel C base channel.

Apply silicone sealant as shown below to where the panels meet the base channel, between the base channel and the shower tray (or tiles) and the wall channel & wall, inside & out.

Run a fillet of silicone sealant down the join between panels A & B and B & C on the inside (wet side) of the screen only.

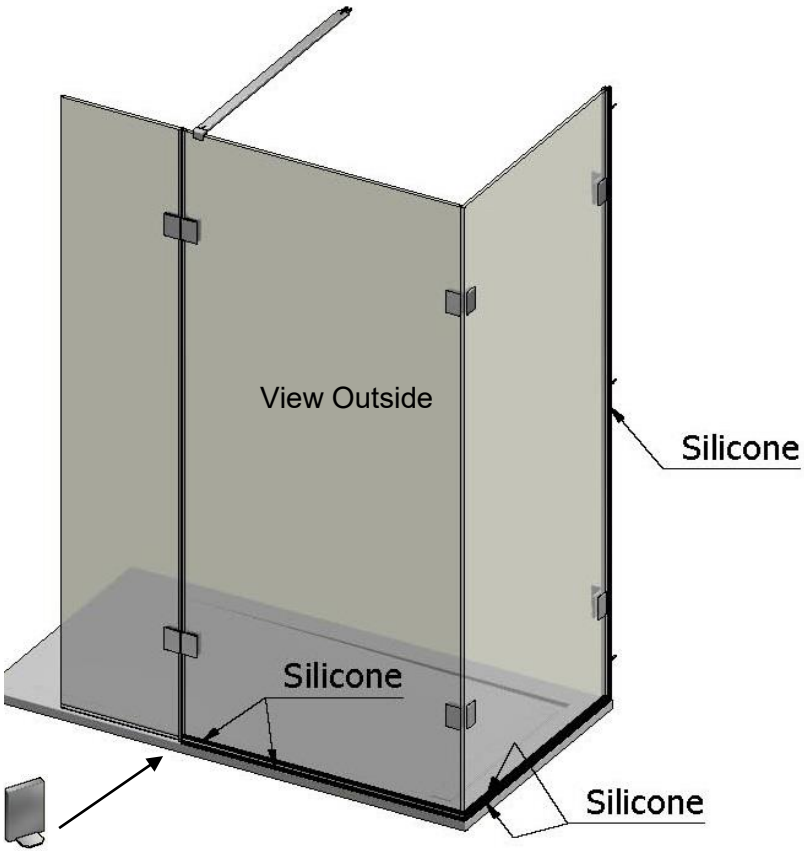

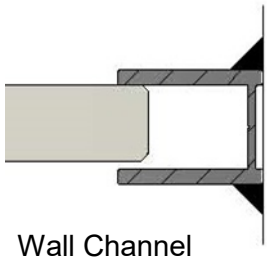

Wall Channel

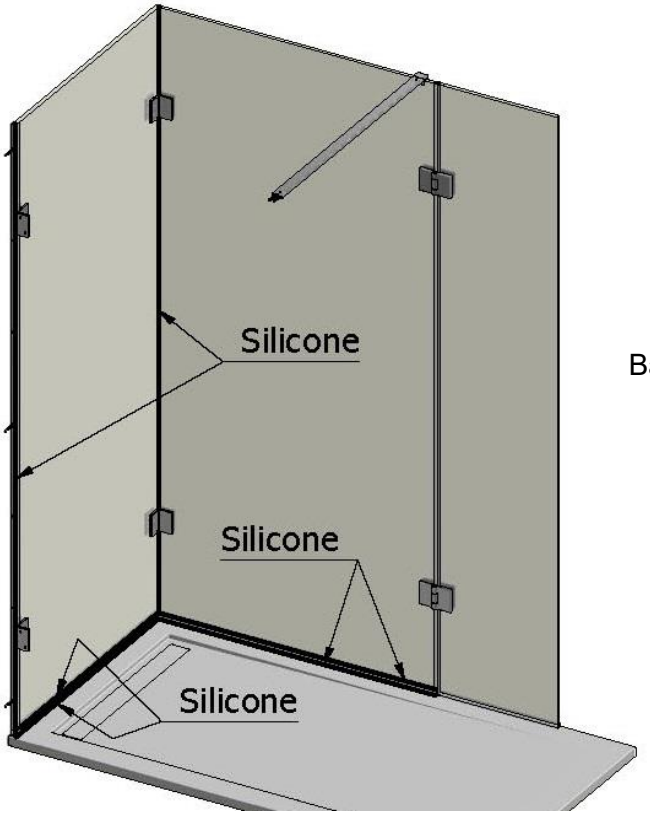

Base Channel